Texas Instruments

bq24001/2/3/7 Single-Cell Li-Ion Charger With Integrated FET in MLP-20 Package EVM

User's Guide

July 2002

Advanced Analog Products

SLUU113

IMPORTANT NOTICE

Texas Instruments Incorporated and its subsidiaries (TI) reserve the right to make corrections, modifications, enhancements, improvements, and other changes to its products and services at any time and to discontinue any product or service without notice. Customers should obtain the latest relevant information before placing orders and should verify that such information is current and complete. All products are sold subject to TI's terms and conditions of sale supplied at the time of order acknowledgment.

TI warrants performance of its hardware products to the specifications applicable at the time of sale in accordance with TI's standard warranty. Testing and other quality control techniques are used to the extent TI deems necessary to support this warranty. Except where mandated by government requirements, testing of all parameters of each product is not necessarily performed.

TI assumes no liability for applications assistance or customer product design. Customers are responsible for their products and applications using TI components. To minimize the risks associated with customer products and applications, customers should provide adequate design and operating safeguards.

TI does not warrant or represent that any license, either express or implied, is granted under any TI patent right, copyright, mask work right, or other TI intellectual property right relating to any combination, machine, or process in which TI products or services are used. Information published by TI regarding third–party products or services does not constitute a license from TI to use such products or services or a warranty or endorsement thereof. Use of such information may require a license from a third party under the patents or other intellectual property of the third party, or a license from TI under the patents or other intellectual property of TI.

Reproduction of information in TI data books or data sheets is permissible only if reproduction is without alteration and is accompanied by all associated warranties, conditions, limitations, and notices. Reproduction of this information with alteration is an unfair and deceptive business practice. TI is not responsible or liable for such altered documentation.

Resale of TI products or services with statements different from or beyond the parameters stated by TI for that product or service voids all express and any implied warranties for the associated TI product or service and is an unfair and deceptive business practice. TI is not responsible or liable for any such statements.

Mailing Address:

Texas Instruments
Post Office Box 655303
Dallas, Texas 75265

Copyright © 2002, Texas Instruments Incorporated

Preface

Read This First

About This Manual

This user's guide describes the bq24001/2/3/7 evaluation module (EVM) for a linear Li-ion charge-management solution that uses the bq24001/2/3/7. This guide describes a complete designed-and-tested charger, which delivers up to 1.0 A of continuous-charge current for one-cell applications

How to Use This Manual

This document contains the following chapters:

- Chapter 1—Introduction
- Chapter 2—Test Summary
- Chapter 3—Physical Layouts
- Chapter 4—Bill of Materials
- Appendix A—Schematic

Related Documentation From Texas Instruments

- bq24001, bq24002, bq24003 data sheet, literature number SLUS462A
- bq24007 data sheet, literature number SLUS479B

Trademarks

PowerPAD is a trademark of Texas Instruments.

Contents

1 Introduction 1-1
1.1 Background 1-2
1.2 Performance Specification Summary 1-2

2 Test Summary 2-1
2.1 Setup 2-2
2.1.1 I/O Connections 2-2
2.1.2 Jumper-Selectable Configuration 2-2
2.2 Test Procedures 2-2
2.2.1 For Single-Cell Applications 2-2

3 Physical Layouts 3-1
3.1 Board Layout 3-2

4 Bill of Materials 4-1
4.1 Bill of Materials 4-2

A Schematic A-1

Figures

3–1 SLUP167 Board Layout Top Layer 3-2
3–2 SLUP167 Board Layout Bottom Layer 3-3
3–3 SLUP167 Top Assembly View 3-3

Tables

1–1 Performance Specification Summary (One Cell) 1-2
4–2 bq24001/2/3/7 EVM Bill of Materials 4-2

Chapter 1

Introduction

This user's guide describes the bq24001/2/3/7 EVM for a linear Li-ion charge-management solution for battery-pack applications that uses the bq24001/2/3/7. This guide describes a complete designed-and-tested charger, which delivers up to 1.0 A of continuous-charge current.

Topic **Page**

1.1 Background **1-2**

1.2 Performance Specification Summary **1-2**

1.1 Background

The bq24001/2/3/7 series ICs are advanced Li-Ion linear charge management devices for highly integrated and space-limited applications. They combine high-accuracy current and voltage regulation; FET pass-transistor and reverse-blocking Schottky; battery conditioning, temperature, or input-power monitoring; charge termination; charge-status indication; and charge timer in a small, 20-lead RGW package.

The bq24001/2/3/7 continuously measures battery temperature using an external thermistor. For safety reasons, the bq24001/2/3/7 inhibits charge until the battery temperature is within the user-defined thresholds. Alternatively, the user can monitor the input voltage to qualify charge. The bq24001/2/3/7 series then charge the battery in three phases: preconditioning, constant current, and constant voltage. If the battery voltage is below the internal low-voltage threshold, the bq24001/2/3/7 uses trickle-charge to condition the battery. A preconditioning timer is provided for additional safety. Following preconditioning, the bq24001/2/3/7 applies a constant-charge current to the battery. An external sense-resistor sets the magnitude of the current. The constant-current phase is maintained until the battery reaches the charge-regulation voltage. The bq24001/2/3/7 then transitions to the constant voltage phase. The user can configure the device for cells with either coke or graphite anodes.

Charge is terminated by either of the following methods:

- ❑ Maximum time
- ❑ Minimum current detection plus 23-minute timeout
- ❑ Termination can be disabled on the bq24007 IC (disables hour/s timer)

1.2 Performance Specification Summary

This section summarizes the performance specifications of the bq24001/2/3/7 EVM. Table 1–1 gives the performance specifications of the hubs.

The bq24001/2/3/7 automatically restarts the charge if the battery voltage falls below an internal recharge threshold.

Table 1–1. Performance Specification Summary (One Cell)

Specification		Test Conditions	Min	Typ	Max	Units
Input dc voltage, V_I			4.9	5.0	†	V
Battery charge current			0.9	1	1.1	A
Battery voltage regulation		J6 set to V_{CC}	4.15	4.20	4.25	V
		J6 set to GND	4.05	4.1	4.15	
Therm fault	High, $T_{(BATMAX)}$	J2 set to Therm	43	48	53	°C
	Low, $T_{(BATMIN)}$	J2 set to Therm	0	5	10	
APG (user defined, see data sheet)		J2 set to APG		‡		
Power dissipation, P_D		$(V_I\text{-}V_O) \times I_{load}$			2.3	W

† V_I, for a single-cell, should not exceed 5.3 VDC for the 1-A charge rate and 7.6 V for the 0.5-A charge rate. (V_I is the input voltage to the bq24001 IC, pins 2 and 3. The power supply source voltage, at J1, is 0.1 V larger than V_I because of the regulated voltage drop across the current sense resistor, during constant current regulation.)

‡ If J2 is set to APG, then the chip is pending when the input is outside of this range: 3.0 V–7.7 V.

Chapter 2

Test Summary

This chapter shows the test setups used, and the tests performed, in designing the bq24001/2/3/7 EVM.

Topic **Page**

2.1 Setup **2-2**

2.2 Test Procedures **2-2**

2.1 Setup

The bq24001/2/3/7 EVM board requires a dc power source (0–6VDC, ≥ 1.1 A or equivalent to provide input power and a single-cell lithium-ion or lithium-polymer battery to charge. Adjust the power supply for 5.1 V ±0.1 VDC and set the current limit to 1.3 A ±0.2 A. Power down the supply.

The test setup connections and jumper setting selections are listed below.

2.1.1 I/O Connections

Jack	Connect to:
J1 – DC+	Power source positive output
J1 – DC–	Power source negative output
J7 – BAT+	Positive lead of single lithium ion cell
J7 – DC–	Negative lead of single lithium ion cell
J7 – SENSE+	Tie to battery's positive terminal
J8 – THRM	Tie to thermistor lead in battery pack
J8 – DC–	Tie to other thermistor lead (may be same wire as BAT–)

2.1.2 Jumper-Selectable Configuration (Factory Set to Bold Selections)

Jumper	Selection
J2	Adapter power good (APG) or battery thermistor, **APG**/THRM
J3†	Enable, **ON**/OFF
J4	Regulation voltage per cell, **4.2 V**/4.1 V
J5	Timer, 3-hour (float, no jumper),/**4.5-hour/**6-hour
J6	Stat2 green diode, jumper for bq24002/3

† This jumper enables/disables the IC for bq24001/2/3. For bq24007, this jumper enables/disables the change timer.

2.2 Test Procedures

2.2.1 For Single-Cell Applications

Set up the evaluation board as described above, by making the necessary I/O connections and jumper selections.

Note:

Before test and evaluation, it is important to verify that the maximum power dissipation on the IC is not exceeded. Pmax = 2.3 W.

$P_{diss,\ single\ cell} = (V_I - 3.5\ V) \times I_{CHG}$ where $V_I = V_{DC+} - 0.1\ V$

Note:

V_I, for a single cell, should not exceed 5.9 VDC for the 1-A charge rate and 8.1 V for the .5-A charge rate.

Turn on the power supply previously set for 5.1 V. The red LED illuminates to indicate charging, unless there is a fault or the battery is fully charged.

The bq24001/2/3/7 enters preconditioning mode if the battery is below the LowV threshold. In this mode, the bq24001/2/3/7 trickle-charges with approximately 65 mA for approximately 23 minutes. If the battery does not reach the LowV threshold during this period, then the charge current is terminated and the bq24001/2/3/7 enters fault mode. The red LED flashes when in fault mode. This feature may be tested by removing input power, replacing the battery with a 30–40-Ω, 0.25-W resistor from BAT+ to DC–, and applying power (Vin) for more than 23 minutes. Fault mode is reset by toggling input power or enable pin.

Once the battery charges to the LowV-stop threshold, the battery enters fast-charge mode and charges at the programmed 1-A level. Program charge level may be changed by adjusting R3 $\left(R3 = \frac{0.10\ V}{I_{chg}} \right)$.

The battery remains at the fast-charge mode until either the selected time expires or the battery charges to the selected regulation voltage. The bq24007 IC's 3/4.5/6 hour timer can be disabled which disables termination.

The time-out feature is tested by using a 10–14-Ω, 3-W resistor in place of the battery. Apply the resistor after the unit is powered.

If the battery discharges down to the HighV threshold, the charger starts fast charging. The refresh feature may be tested by charging a battery to completion (I_{term} + 23 minutes) and, without disconnecting the battery, installing a 3–5-Ω, 10-W resistor in parallel with the battery. The regulator should start charging once the HIGHV threshold is reached. Note that battery is still charging for another 23 minutes after the LED turns off. If a load (>Iterm) is applied before the 23 minutes has timed out then the load will reset the 23 minute timer.

The circuit has an overvoltage comparator for added protection. If the battery voltage exceeds this threshold for 330 ms, then the charger goes into fault mode. This may be tested by connecting an external power supply in place of the battery and adjusting the voltage above the threshold.

Chapter 3

Physical Layouts

This chapter contains the board layout and assembly drawings for the SLUP167 board used for the bq24001/2/3/7 EVM.

Topic **Page**

3.1 Board Layout 3-2

3.1 Board Layout

Figure 3-1 shows the top layer of the SLUP167. Figure 3-2 shows the bottom layer. Figure 3-3 shows the SLUP167 top assembly view.

Figure 3–1. SLUP167 Board Layout Top Layer

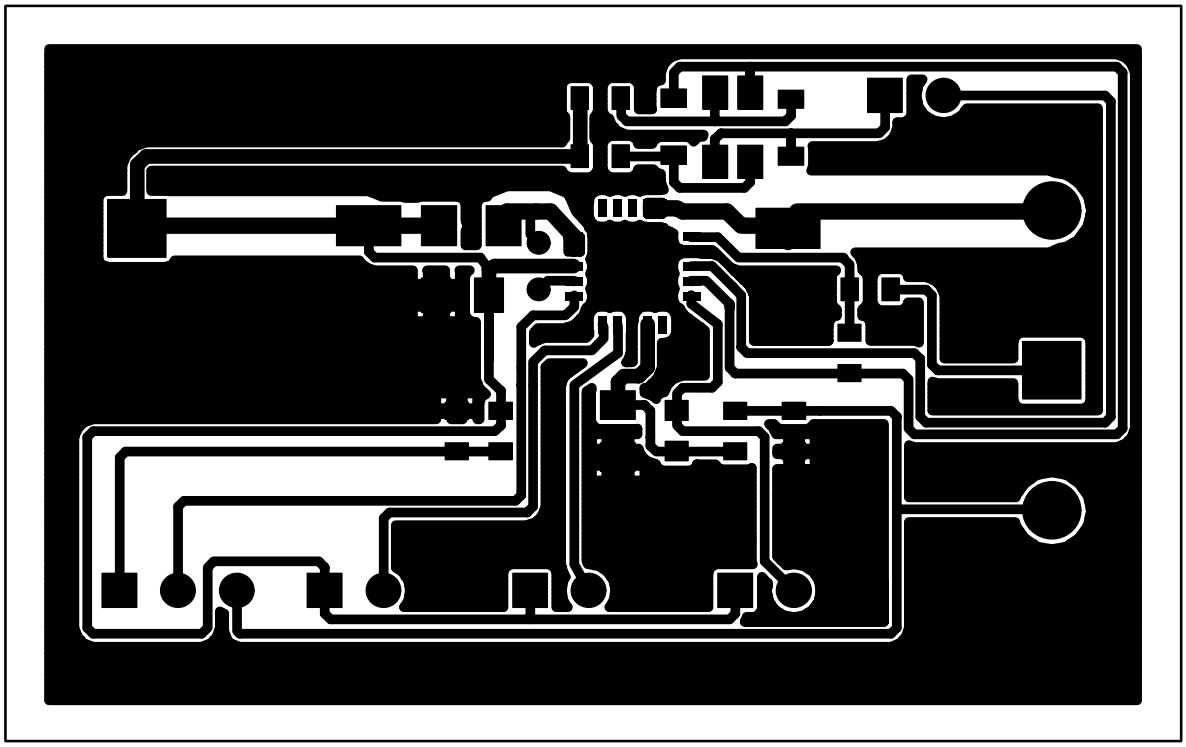

Figure 3–2. SLUP167 Board Layout Bottom Layer

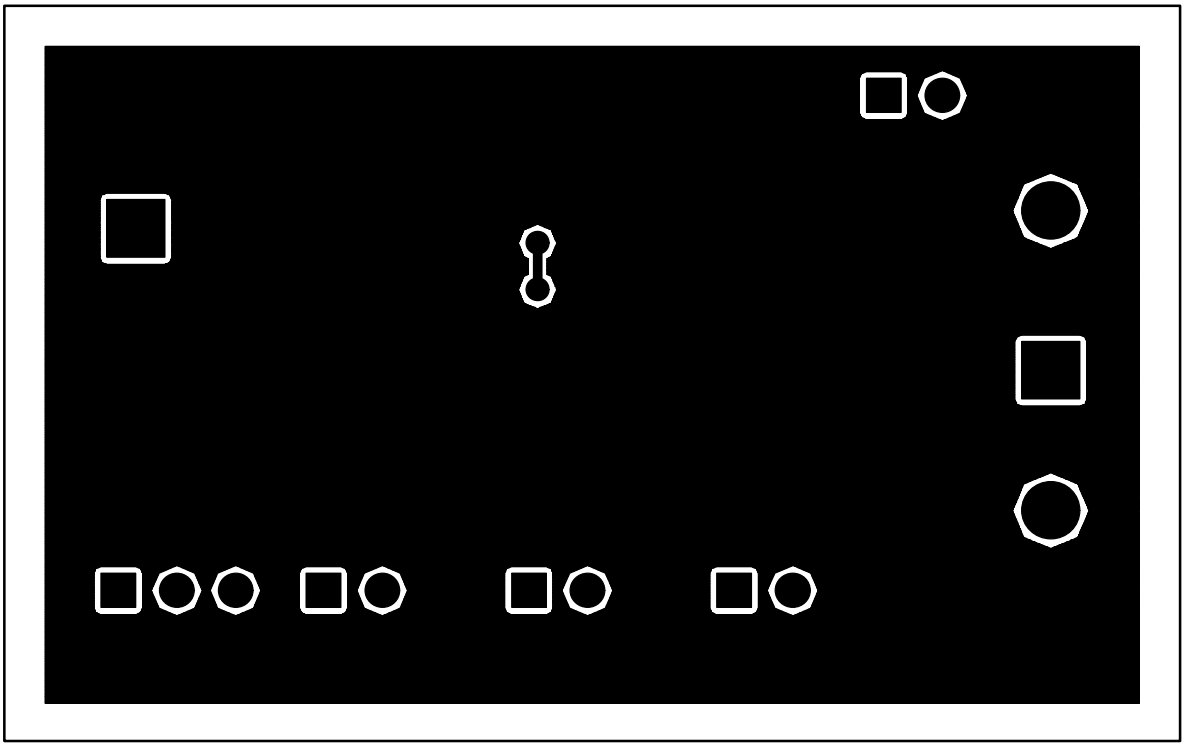

Figure 3–3. SLUP167 Top Assembly View

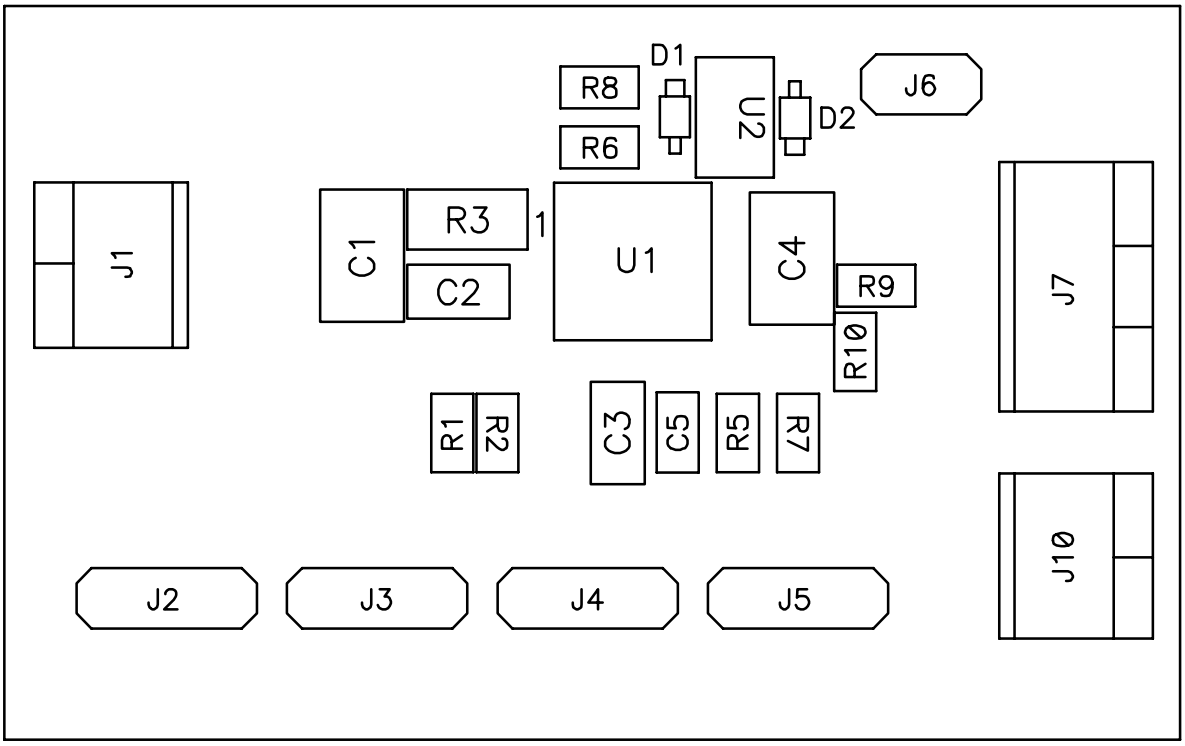

Chapter 4

Bill of Materials

This chapter contains the bill of materials required for the bq24001 EVM. It also specifies the charge status configurations for the bq24001 ICs.

Topic **Page**

4.1 Bill of Materials 4-2

4.1 Bill of Materials

Table 4-1 lists materials required for the bq24001/2/3/7 EVM using the SLUP167 (PWB) board.

Table 4–1. bq24001/2/3/7 EVM (SLUP167) Bill of Materials

5 mm MLP Square Package									
Item #	**–001 (bq24001)**	**–002 (bq24002)**	**–003 (bq24003)**	**–004 (bq24007)**	**RefDes**	**Description**	**Size**	**MFR**	**Part Number**
1	2	2	2	2	C1, C4	Capacitor, tantalum, 10 µF, 16 V	1210	Panasonic	ECS–T1CX106R
2	1	1	1	1	C2	Capacitor, ceramic, 0.1 µF, 16 V X7R	805	Panasonic	ECJ–2VB1C104K
3	1	1	1	1	C3	Capacitor, ceramic, 0.22 µF, 16 V X7R	805	Panasonic	ECJ–2VB1C224K
4	1	1	1	1	C5	Capacitor, ceramic, 10 pF, 50 V, NPO, 1%	603	Panasonic	ECJ–1VC1H100D
5	1	1	0	1	D1	LED, red, 20 mA maximum		Panasonic	LN1271R–(TR)
6	0	1	0	0	D2	LED, green, 20 mA maximum		Panasonic	D–LN1371G–(TR)
7	0	0	1	0	U2	LED, BiColor—red/green, 20 mA maximum		Chicago Miniature Lamp	CMD67–22SRUGC/TR8
8	2	2	2	2	J1, J10	Terminal block, 2 pin, 6 A, 3,5 mm	75525	OST	ED1514
9	4	4	4	4	J2, J3, J4, J5	Header, 3 pin, 100 mil spacing, (36-pin strip)	34100	Sullins	PTC36SAAN
10	0	1	1	0	J6	Header, 2 pin, 100 mil spacing, (36-pin strip)	23100	Sullins	PTC36SAAN
11	1	1	1	1	J7	Terminal block, 3 pin, 6 A, 3,5 mm	112625	OST	ED1515
12	1	1	1	1	R1	Resistor, chip, 51.1 kΩ, 1/16 W, 1%	603	Std	Std
13	1	1	1	1	R10	Resistor, chip, 10 MΩ, 1/16 W, 1%	603	Std	Std
14	1	1	1	1	R2	Resistor, chip, 215 kΩ, 1/16 W, 1%	603	Std	Std
15	1	1	1	1	R3	Resistor, chip, 0.1 Ω, 1/8 W	1206	Panasonic	ERJ–8RSJR10
16	1	1	1	1	R5	Resistor, chip, 18.7 kΩ, 1/16 W, 1%	603	Std	Std
17	2	2	2	2	R6, R8	Resistor, chip, 511 Ω, 1/16 W, 1%	603	Std	Std
18	1	1	1	1	R7	Resistor, chip, 95.3 kΩ, 1/16 W, 1%	603	Std	Std
19	1	1	1	1	R9	Resistor, chip, 2 kΩ, 1/16 W, 1%	603	Std	Std
20	1	0	0	0	U1	IC, Single Li-Ion, charger, 1 LED	5mm x 5mm	TI	bq24001RGW
21	0	1	0	0	U1	IC, Single Li-Ion, charger, 2 LED	5mm x 5mm	TI	bq24002RGW
22	0	0	1	0	U1	IC, Single Li-Ion, charger, bicolor LED	5mm x 5mm	TI	bq24003RGW
23	0	0	0	1	U1	IC, Single Li-Ion, charger, EN./DIS. timer	5mm x 5mm	TI	bq24007RGW

Table 4–1. bq24001/2/3/7 EVM (SLUP167) Bill of Materials (Continued)

5 mm MLP Square Package									
Item #	**–001 (bq24001)**	**–002 (bq24002)**	**–003 (bq24003)**	**–004 (bq24007)**	**RefDes**	**Description**	**Size**	**MFR**	**Part Number**
24	1	1	1	1	PWB	PWB, bq24001/2/3/7RGW–(SLUP167) EVM	TI	TI	SLUP167 Rev. A
25	4	5	4	4	Shunts	Shunts for header – J2–J6, 4 to 5 shunts	0.1”	Sullins Electronics Corp.	SPC02SYAN

Assembly Note:

1) Shunts to be applied to J2–APG, J3–ON, J4–4.2V, J5–4.5Hr, and J6 if required

Appendix A

Schematic

This chapter contains the schematic diagram for the bq2401/2/3/7 EVM.

Topic **Page**

A.1 Schematic A-2

A.1 Schematic

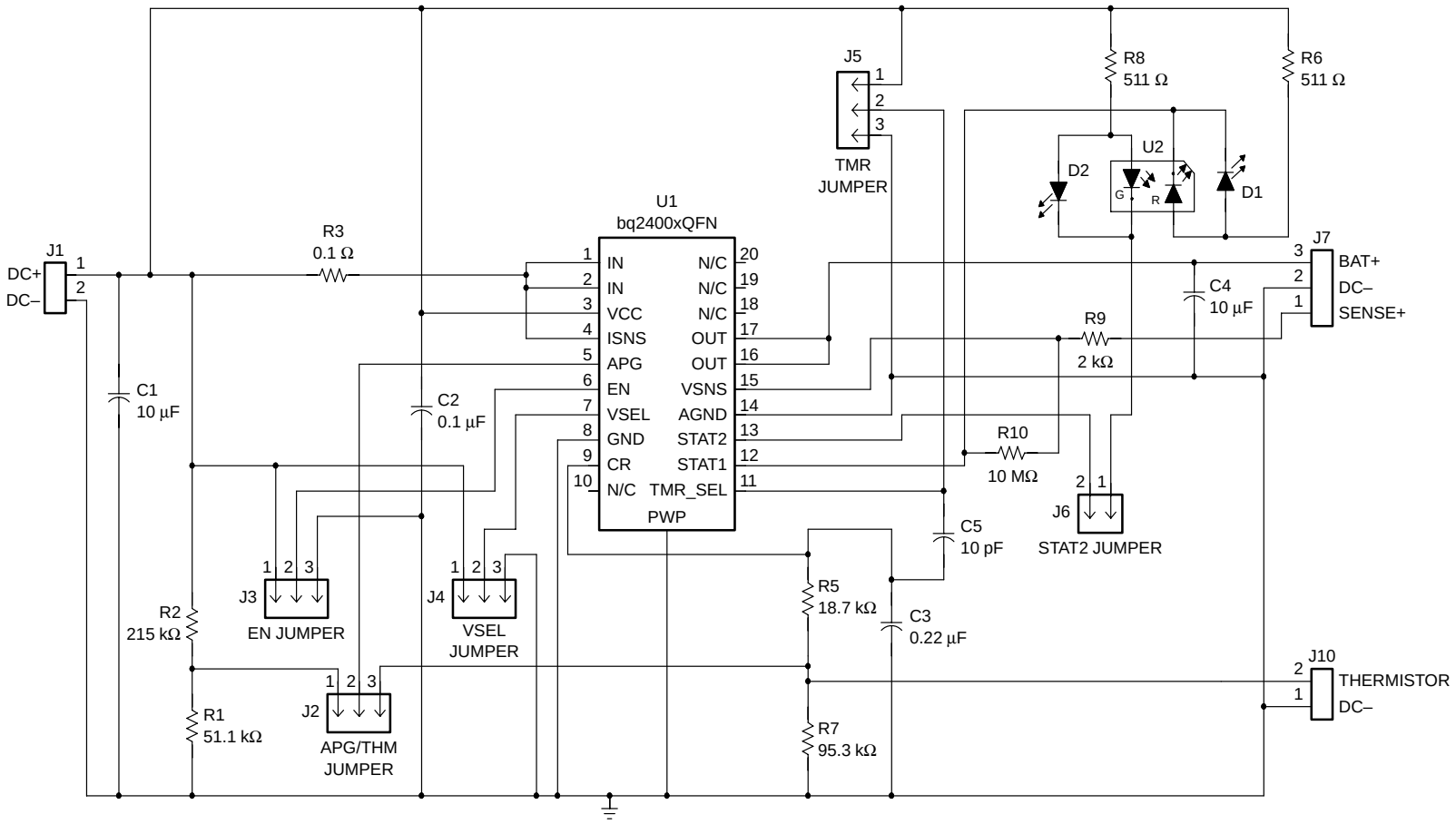

Figure A–1 shows the bq24001 EVM (SLUP167) schematic diagram.